Lacanche Range Cooker

CITEAUX
INDUCTION

LVI 1532 E / CT

CONTENTS

CITEAUX INDUCTION

TECHNICAL DATA ——— 3

INSTALLER'S MANUAL 7

INSTALLATION / POSITIONING ——— 9

OPENING AND CLOSING THE HOB ——— 11

ELECTRIC CONNECTION ——— 12

SERVICING / REPAIRS ——— 13

ELECTRIC CIRCUIT DIAGRAMS ——— 17

USER'S MANUAL 19

CITEAUX INDUCTION ——— 20

CAUTION ——— 21

INDUCTION HOB ——— 23

RECOMMENDATIONS BEFORE USING OVENS ——— 27

CONVECTION ELECTRIC OVEN (VERTICAL SIDE OVEN) ——— 29

STATIC ELECTRIC OVEN ——— 30

DUAL FUNCTION ELECTRIC OVEN ——— 31

SIMMER OVEN (OPTION) ——— 33

CLEANING AND MAINTENANCE ——— 34

Information regarding the elimination of electric and electronic waste ——— 36

TECHNICAL DATA

CITEAUX ELECTRIC : INDUCTION HOB

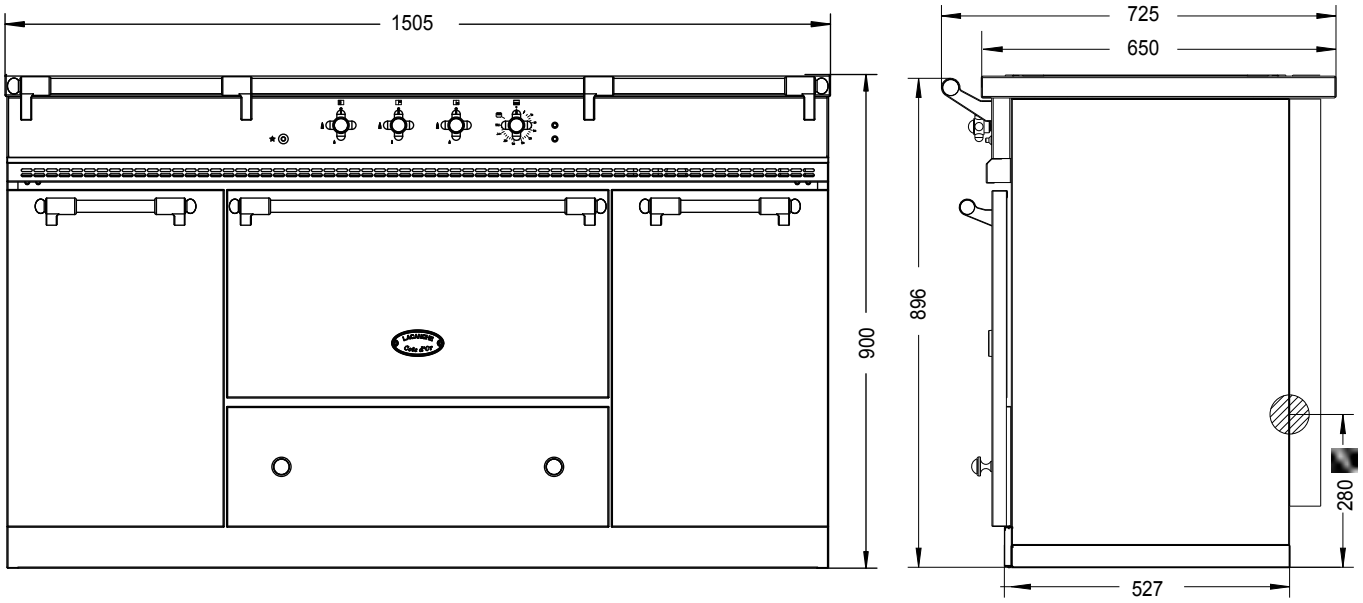

The height of the cooker is adjustable between 900 and 916 mm.

► Front body panels : Stainless steel.
► Hob : Pressed stainless steel.

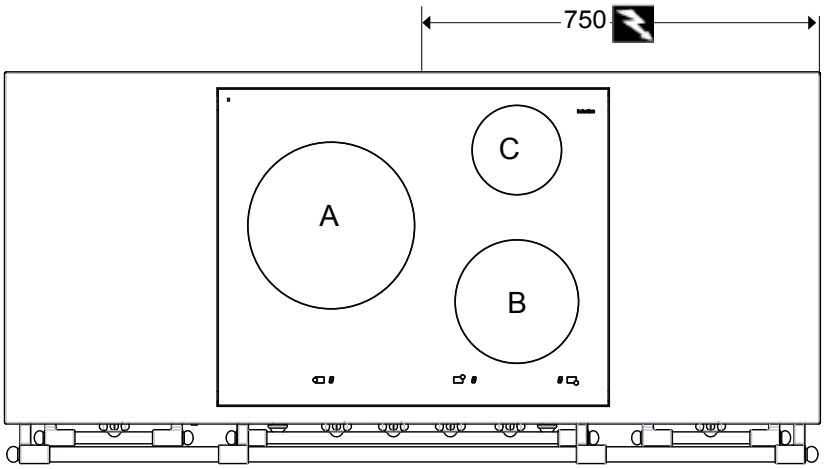

Electric connection, on terminal block at the rear of the appliance

►CITEAUX INDUCTION

- 3 induction zones of different sizes and power under a 4 mm glass-ceramic surface (Hob **A**, **B, C** table **2** in appendix **0**).
- 9 power selections
- “Booster” function on each induction zone.
- Programmable temperature setting.
- Keep Warming functions : 42°C and 70°C.
- Classic Lacanche knob hob controls.
- Digital power display.
- Child safety function
- Safety warming display when ceramic hob is hot (above 60°C)

Power : 7400 W – 230 V 1N~ 50 Hz/ 400 V 3N~ 50 Hz

TECHNICAL DATA

Static Electric Oven :

► Enamelled sheet metal.
► Dimensions L x H x P : 530 mm x 305 mm x 455 mm, 74 litre.
► 3 shelf levels with 70 mm spacing in between.
► Thermostatically controlled roof and base heating elements, safety thermostat.
► Fitted with an electric grill (2850 W).

Power : 2900 W – Supply : 230 V 1N~ 50 Hz/ 400 V 3N~ 50 Hz

Dual function Electric Oven :

► Enamelled sheet metal.
► Dimensions L x H x P : 530 x 305 x 405, 65 litre.
► 3 shelf levels with 70 mm spacing in between.
► Dual function (Static Electric or Convection) oven.
►Fitted with an electric grill (2850 W).

On Static Electric Oven Function :

The heating elements consist of a 1700 W element at the base and a peripheral 1200 W element in the roof which operate simultaneously.
Thermostatically controlled roof and base heating elements, safety thermostat.

Power : 2900 W – Supply : 230 V 1N~ 50 Hz/ 400 V 3N~ 50 Hz

On Convection Electric Oven Function:

The oven is heated by a circular element 2950 W in the back wall, surrounding a fan.
Thermostatically controlled circular heating element, safety thermostat.

Power : 2950 W – Supply : 230 V 1N~ 50 Hz/ 400 V 3N~ 50 Hz

Convection Electric Oven (Vertical side oven) :

►Enamelled sheet metal.
►Dimensions L x P x H : 305 mm x 405 mm x 400 mm, 49 litre.
►Fitted with an electric grill (2400 W).
► 4 shelf levels with 73 mm spacing.
►The oven is heated by a circular 2650 W element in the back wall, surrounding a fan unit.
►Thermostatically controlled circular heating element, safety thermostat.

Power : 2650 W – Supply 230 V 1N~ 50 Hz

Simmer oven :

►Enamelled sheet metal.
►Dimensions L x H x P : 325 mm x 495 mm x 530 mm, 85 litre.
► 4 shelf levels with 125 mm spacing i between.
►Thermostatically controlled base heating element (950 W).
►Capacity : 72 plates of Ø 24 cm.

Power : 950 W – Supply : 230 V 1N~ 50 Hz

Accessories :

Electric Oven : One roasting tray.
One grill insert with fits into the roasting tray.
One oven rack.

Convection Electric Oven : One roasting tray.
One grill insert with fits into the roasting tray.
Two oven rack.

Simmer Oven : 2 oven rack.

Directives :

Low Voltage : 2006/95/CEE.

CEM : 2004/108/CEE.

Lacanche Range Cooker

CITEAUX INDUCTION

INSTALLER'S MANUAL

Appliances must be installed in a workmanlike manner in accordance with the instructions in this manual and locally applicable regulations.

This manual should be handed over to the user after installation.

INSTALLATION / POSITIONING

CAUTION :

The purchaser undertakes to install or arrange for his/her equipment to be installed in a workmanlike manner and in accordance with the applicable regulations and standards.
Any servicing or repair work on this appliance must be performed by a qualified engineer.

Never attempt to lift the cooker by holding the hand rails. This will damage the cooker and invalidate the warrantly.

DELIVERY & PACKAGING

The Cooker is packed in a cardboard carton, and sits on a wooden pallet to which the cooker is bolted. You will need a 10mm spanner to undo the nuts and bolts attaching the cooker to the pallet. Carefully remove the cooker from the pallet. NOTE: Never attempt to lift the cooker by holding the hand rails. This will damage the cooker and invalidate the warranty.

Unpack and check the range is in good condition. In case of damage, note any reservations on the delivery note and confirm them within 48 hours by registered letter with confirmation of delivery to the carrier.

PLACING THE COOKER

Allow a minimum clearance of 50 mm between the appliance and any other surfaces (walls affected by heat).

Line the cooker up with the intended space for it and gently push the cooker backwards into position, ensuring not to mark or damage the floor. It may be helpful to cover that part of the floor over which the cooker is to be moved with some sort of covering to protect it, which can be removed once the cooker is in place.

LEVELLING THE COOKER

In order to level the cooker the plinth needs to be removed. This is done by removing the drawer. Remove the drawer by opening it, and gently tilting the open front upwards and then lifting the drawer and rear as well and extracting the drawer. Place the drawer carefully on a protective surface.

Two steel pins attach the plinth to the base of the cooker, running through the top of the plinth and base of the cooker. These are evident once the drawer has been removed (they look like the top of nails). Simply pull the two pins out, and carefully remove the steel plinth which should now be loose.

Using the spanner (supplied with cooker in the drawer), the rear and the front of the cooker need to be leveled in the following way: two bolts will now be evident (exposed by the removal of the plinth). By winding them clockwise the cooker can be lowered, by winding them anti-clockwise it may be raised. The left bolt adjusts the rear left corner of the cooker; the right bolt adjusts the rear right of the cooker. To adjust the front of the cooker, use the larger head of the spanner provided to turn the front left and front right feet of the cooker, situated just inside the front edge of the corners. Clockwise lowers the feet, anti-clockwise raises the feet.

BUILDING IN GUIDANCE

→ If the appliance is to be built in between two surfaces, it is CRUCIAL to allow free circulation of air behind the appliance (provide shielding at rear). Cooktops should NEVER be installed lower than adjacent worksurfaces. It is also recommended to allow the unit front panel to protrude 50 mm relative to the adjacent units.

→ The cooker muste be installed under an exhaust hood.

→ Do not install this unit near combustible walls, partitions, pieces of furniture or decorative material unless these are covered with adequate thermal insulation of a noncombustible type. Make sure the resulting installation meets local fire regulations.

INSTALLATION / POSITIONING

Ensure that the materials adjacent to the lateral panels of the oven are not flammable.

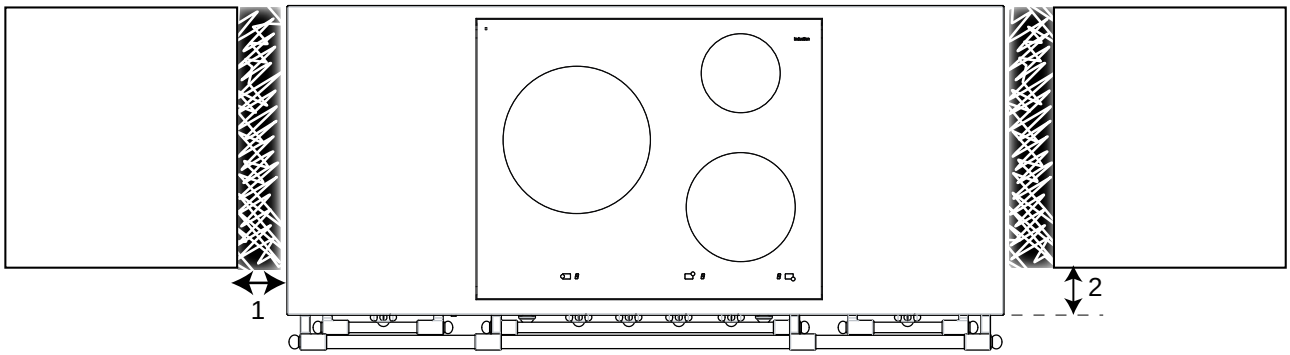

① If the adjacent parts contain heat-sensitive materials, ensure there is a 50-mm gap between the side of the oven and the parts in question.

② We recommend the front edge of the hob be positioned 50 mm further forward than the adjacent fittings. (see below).

◊ **<u>Use of the back in fill panel :</u>**

This feature is particularly recommended for built-in ovens as it ensures a 50 mm gap between the appliance and the wall. It also increases the depth of the hob to 722,5 mm.

Product code : DS 1500.

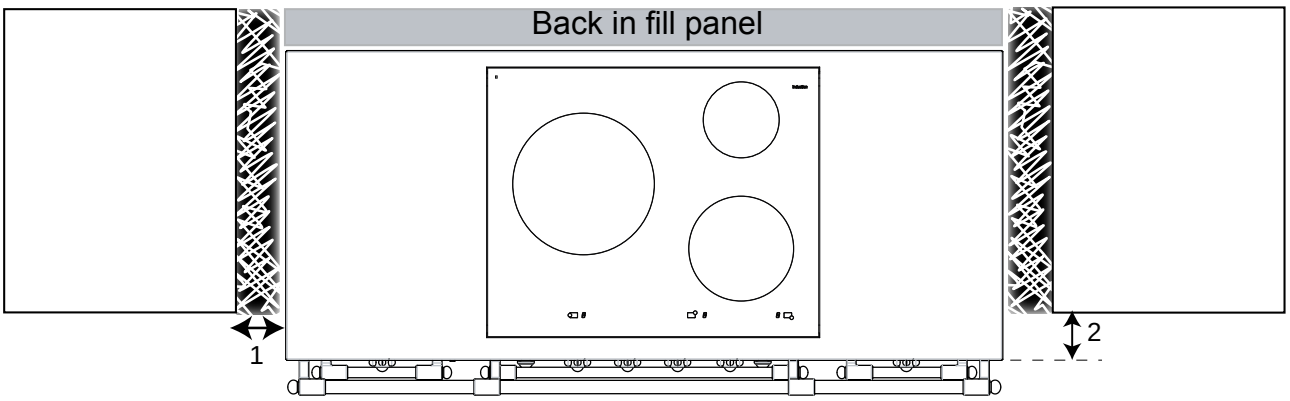

OPENING AND CLOSING THE HOB

It may be necessary to open the hob under the following circumstances :
- Making adjustments when changing gas type.
- Adjusting thermocouples.
- Resetting the safety thermostat.

To remove top :

1- Loosened the 2 screws (see A/ figure 1) through the ventilation strip.

2. Lift the hob (figure 2).

3- Wedge the hop open (see.B/ figure 2).

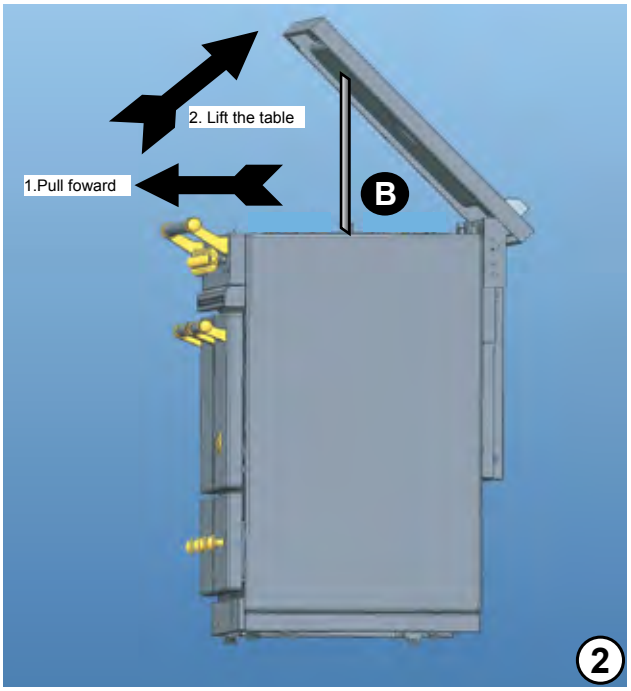

Refitting the cooking surface

When refitting the cooking surface, it is vital to tighten the fastening screws. Failure to do so can cause distortion of the hob top.

ELECTRIC CONNECTION

The cooker must be installed in a workmanlike manner in accordance with the instructions in this manual and locally applicable regulations. This manual will be handed over to the user after installation.

Before connection, check :

- ✓ That the electrical supply of the system is compatible with the voltage and power of the range.
- ✓ The user's fixed installation must include an all-pole circuit-breaker of approved type.

Connection : CAUTION :

- Cable insulation must be type 245 IEC 57 or 245 IEC 66
- The length of the conductors of the power cable between the strain relief device and the terminals must be such that the conductors become taut before the earth conductor in case of traction on the cable.
- If this unit is permanently connected to a fixed electrical cable, the cable should be equipped with a fault leak protector.
- If this unit is connected to a wall outlet, the outlet should be permanently accessible.

- Remove cover (or covers) (see A/ figure 1), to the back of the unit identified by ⚡ .
- Use a standard flexible cable to connect to terminal block (see B/ figures 1 & 2).
- Secure the cable by means of cable clamp (see C/ figure 1).

It is hazardous to put the appliance into service without connecting it to suitable ground.

No liability can be accepted for accidents resulting from non-compliance with this requirement or incorrect grounding.

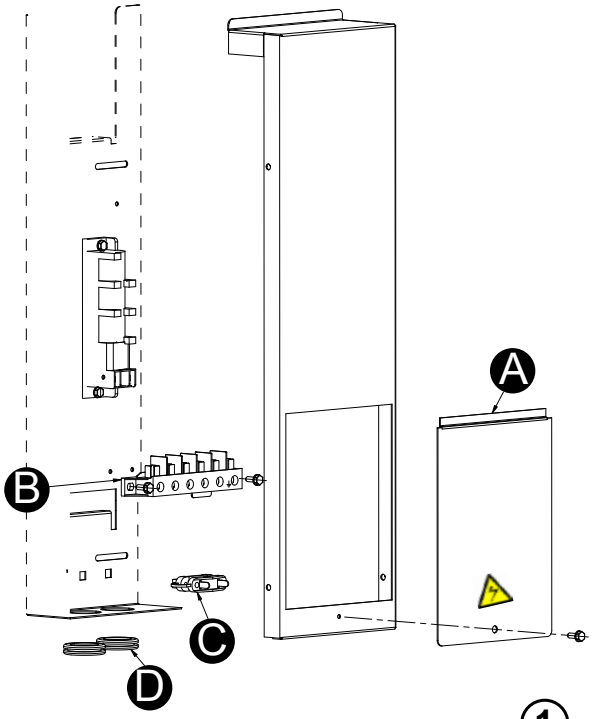

1

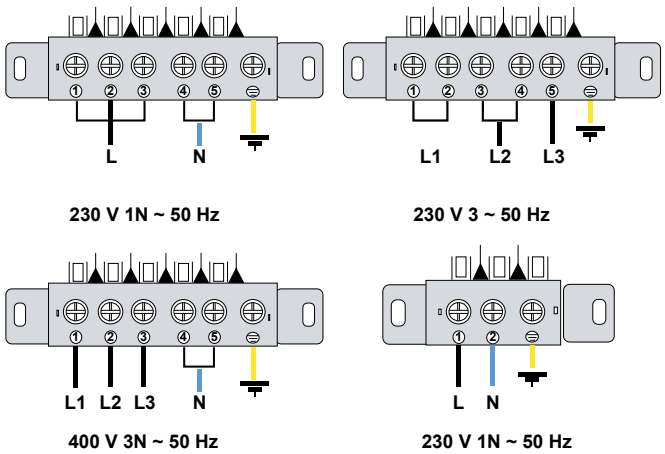

The supply of three phase 400 without neutral is not possible

2

SERVICING / REPAIRS

All work on or repair of an appliance must be carried out by a qualified engineer.

Before any work is carried out on the appliance it must be disconnected from the main electricity supply by disconnecting the terminal strip located on the back of the unit.

Limiting thermostat :

In accordance with the construction regulations, the limiting thermostat is intended to protect the range from overheating.

In the event of overheating the limiting thermostat is triggered and cuts out the range's oven functions.

The advanced technology used in the limiter means that it is very sensitive to impacts and vibration

To reset limiting thermostat

The button is behind the ventilation strip . To have access there, it is necessary to use a small screwdriver to press on the push-button and reset limiting thermostat (see A, figure 1).

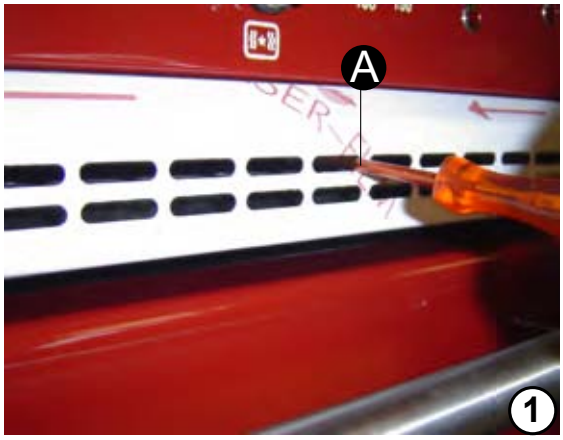

CAUTION :

Do not obstruct the vents.
When installing ensure there is a 50 mm gap between the partition and appliance to enable the induction plate to cool down correctly.

Encoders :

But before doing this the module must be disconnected from the terminal strip located on the back of the unit (see A, figure 1).

To access the encoders, remove the top. (See «To remove top»).

Remove the control knop, by pulling off.

Disconnect the electric cable from the induction hob to the encoder (see B, figure 2).

Unscrew the two screws, (see C, figure 3) securing the encoder to the control panel.

Remove the encoder and replacewith the new one.

Replace the components, in reverse order.

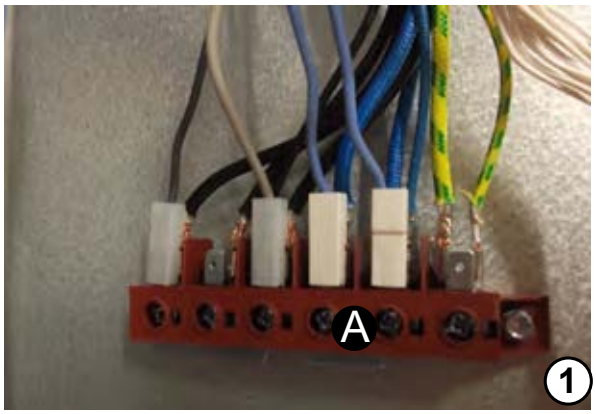

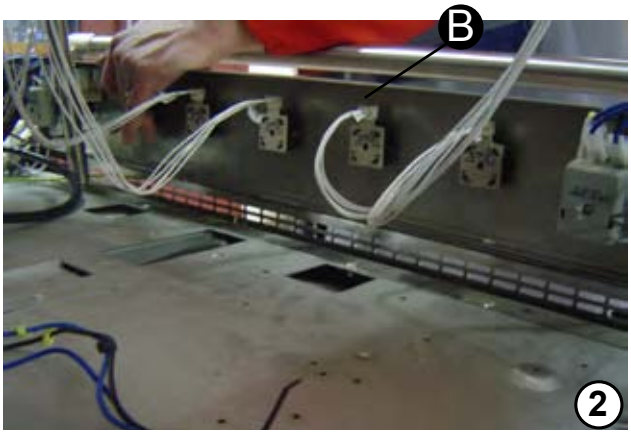

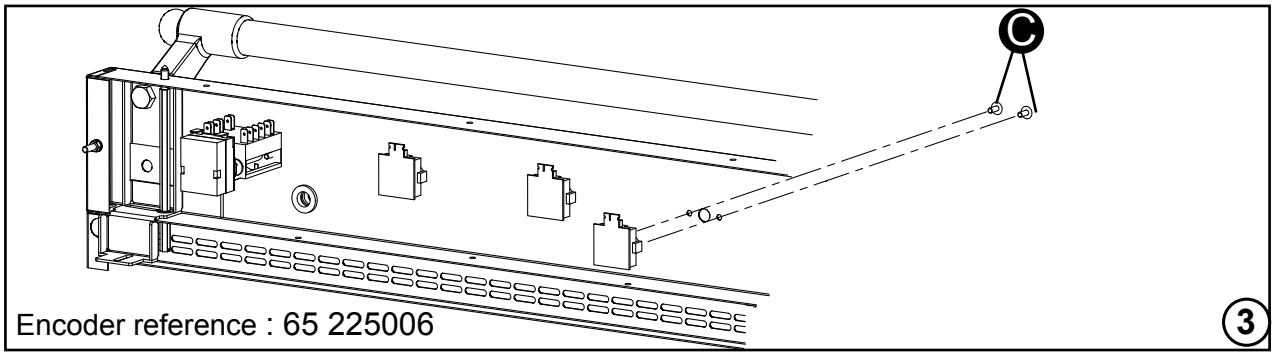

Induction unit :

But before doing this the module must be disconnected from the terminal strip located on the back of the unit (see A, figure 1).

To access the induction unit, remove the top (See «To remove top»).

Disconnect all the cable for the induction hob to the terminal blocks and the encoders cable (see A, figure 1).

Remove the hob and rest it on a stable surface. Ensure the vitroceramic hob is placed on a clean, soft surface so that the glass top is not scratched (see figure 4).

Unscrew the screws from the induction heaters (use a screwdriver or a T10 TORX key), (see D, figure 4 and 5) .

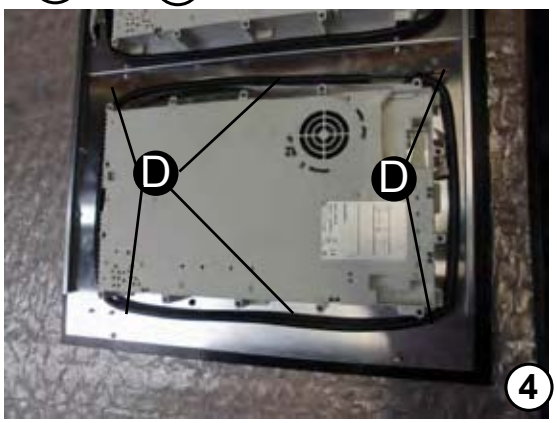

Hold induction units against the vitroceramic and return the complete hob

Unscrew all the screws maintaining the induction units to the vitroceramic, (see E figure 6 and 7).

Remove the vitroceramic hob. The induction units are now open and you can see the different rings (see figure 6). Dévisser les vis Epour libérer les foyers.

To replace, do the same thing in reverse order.

Caution: Be sure the rings do not move when fixing the induction units to the vitroceramic.

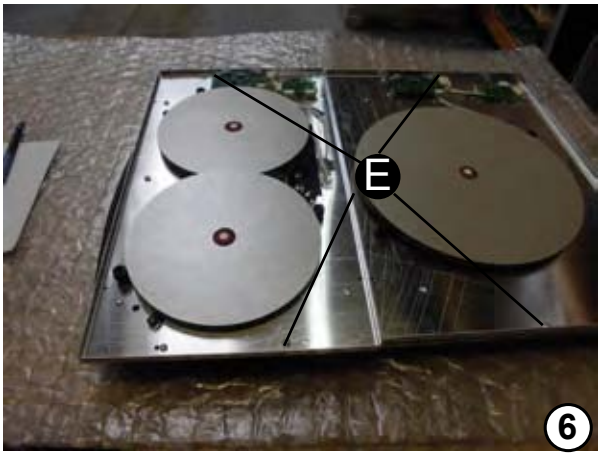

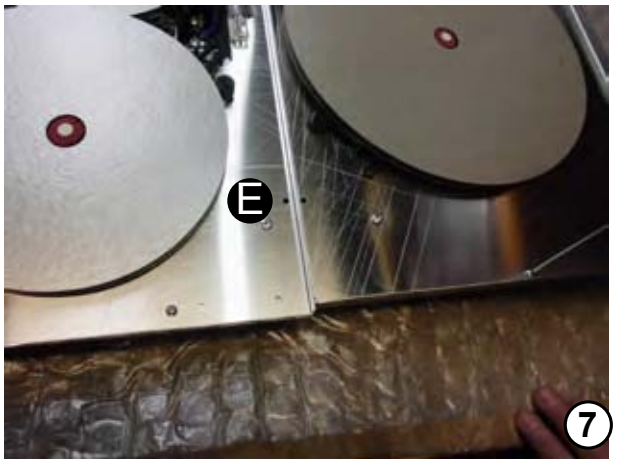

ELECTRIC CIRCUIT DIAGRAMS

For references and descriptions of the various components refer to table 9 in appendix 0

Induction Hob

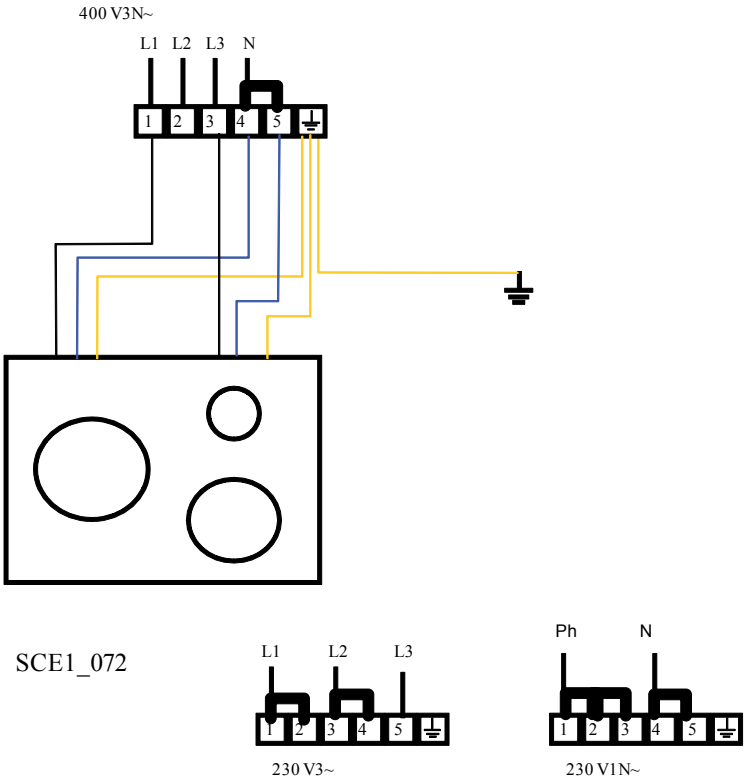

Static Electric Oven

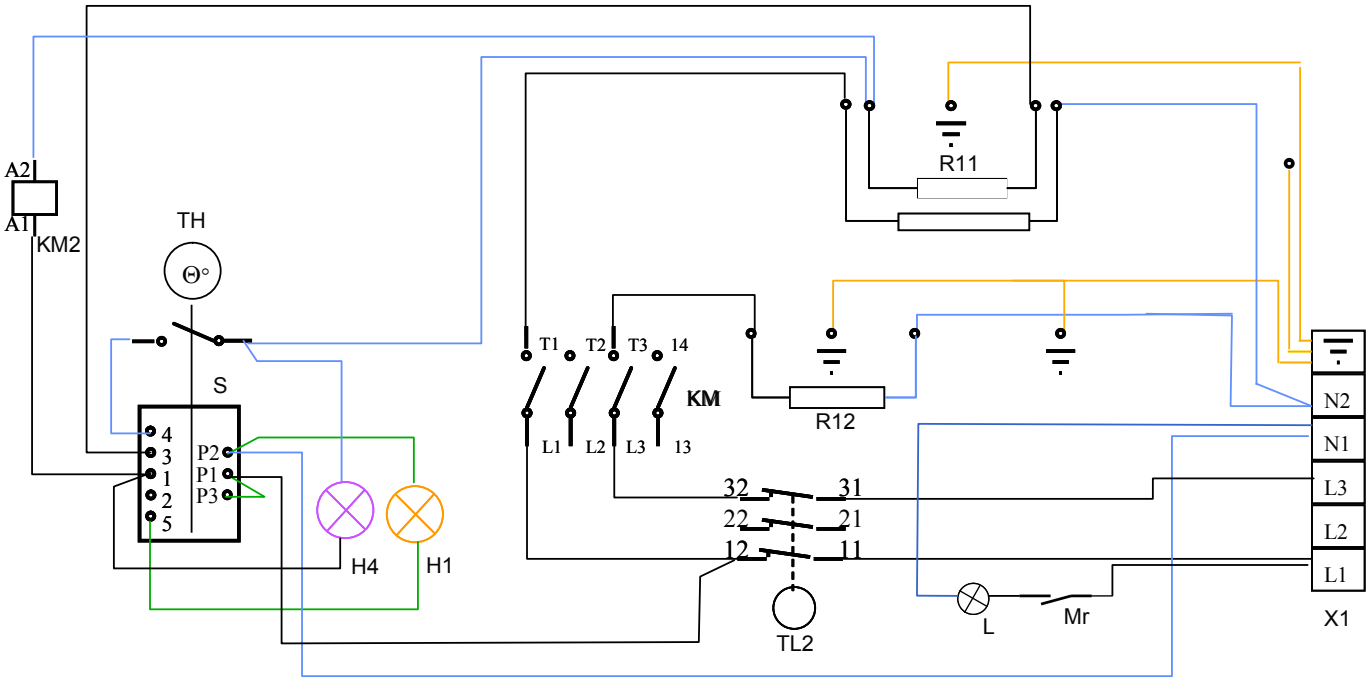

Dual Function Electric Oven

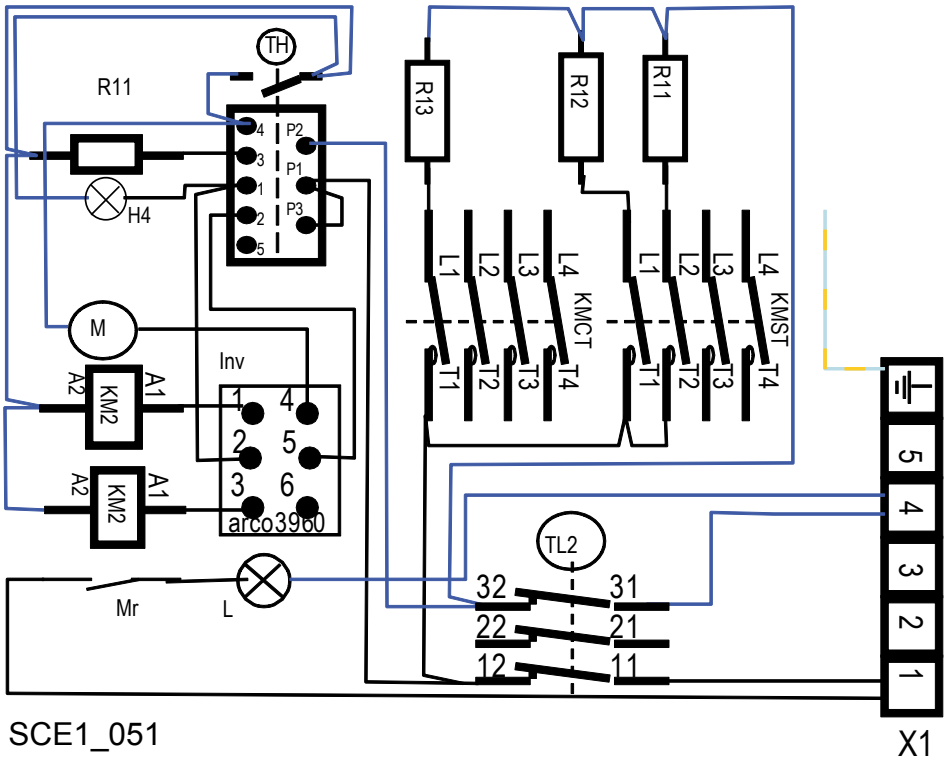

SCE1_051

Simmer Oven

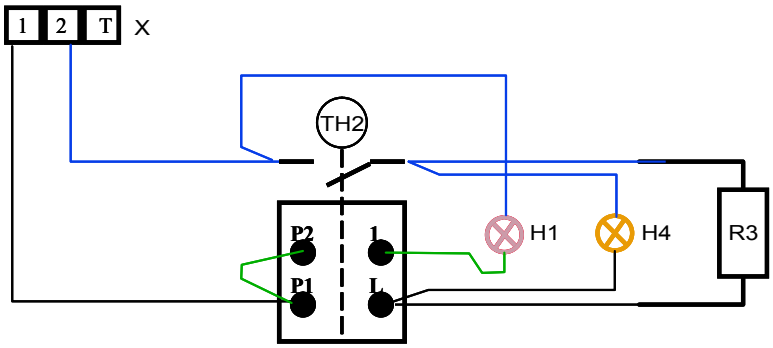

SCE1_025

Lacanche Range Cooker

CITEAUX INDUCTION

USER'S MANUAL

IMPORTANT

This appliance is intended for professional use and must be used by qualified persons. It must be installed in accordance with the applicable regulations and standards in an adequately ventilated room.
Any changeover to a gas other than that for which the appliance is set up must be carried out by a qualified installer.
Any changeover to a voltage other than that for which the appliance is set up must be carried out by a qualified installer.

WARRANTY

The warranty is stated on the sales contract. Please contact your approved Dealer if any work has to be carried out under warranty.
This warranty excludes damage resulting from incorrect installation, improper use or inadequate servicing.

USER'S MANUAL
CITEAUX INDUCTION

CAUTION
——————————————————————————————21
INDUCTION HOB
——————————————————————————————23
RECOMMENDATIONS BEFORE USING OVENS
——————————————————————————————27
CONVECTION ELECTRIC OVEN (VERTICAL SIDE OVEN)
——————————————————————————————29
STATIC ELECTRIC OVEN
——————————————————————————————30
DUAL FUNCTION ELECTRIC OVEN
——————————————————————————————31
SIMMER OVEN (OPTION)
——————————————————————————————33
CLEANING AND MAINTENANCE
——————————————————————————————34
Information regarding the elimination of electric and electronic waste
——————————————————————————————36

This range has the CE marking, i.e. it meets the essential requirements of the European safety directives to which it is subject.

CAUTION

- This appliance is not for use by children. If unfamiliar with this appliance, use should be overseen by a competent person who has read all the relevant information.
- Before use, it is mandatory to remove all the internal and external plastic packing, failure to do so will cause irreversible damage to the steel walls of the cooker.
- Never store flammable products in the oven, cabinet, plate-warmer or on the table. Flammable materials can catch fire, plastic items may melt or ignite and other types of items could be ruined items in other materials may be damaged.
- Never hang / store any flammable products above the appliance, to avoid risk of fire.
- The floor covering of the room in which the range is to be fitted must be capable of withstanding temperatures 65°C greater than ambient temperature without distorting, shrinking or fading. This range must not be fitted on a carpet or plastic floor covering.
- Do not obstruct the flow of combustion or ventilation air to the appliance. Be sure a fresh air supply is available.
- Do not use aluminum foil to line any part of the oven or on the hob.
- Do not hang articles from any part of the appliance or place anything against the oven to avoid risk of fire or degradation of material (e.g.melting).
- This appliance is for cooking. Based on safety considerations, never use the oven or hob to warm or heat a room. Also, such use can damage the hob or oven parts.
- Do not hang articles from any part of the appliance or place anything against the oven to avoid risk of fire or degradation of material (e.g.melting).
- When using the hob, do not touch the burner grates or the immediate surrounding area. Areas adjacent to the burners may become hot enough to cause burns.
- When using the cooker, accessible parts may be hot. It is recommended children stay strictly away from the cooker at all times.
- Monitor the children to be sure they don’t play with the cooker.
- Children should not be left alone in the kitchen while the range is in use. Do not store items of interest to children over the unit. Children climbing to reach items could be seriously injured.
- When using the oven, do not touch the interior surfaces of the oven, the exterior area immediately surrounding the door. The range gets hot during use. Do not touch heating elements inside the oven.
- Disconnect from power supply before servicing.
- If appliance is installed on a base, take precautions to prevent appliance sliding off the base.
- After any use, to close the valve and cut off gas supply.
- Always be sure to disconnect the cooker from the mains electricity supply when replacing the oven light.
- This appliance is not made to be used in conjunction with any type of external timer or separate control system
- Never attempt to lift the cooker by holding the hand rails. This will damage the cooker

INDUCTION HOB

The vitro-ceramic covered induction hotplate is a revolutionary piece of cooking equipment.

An induction ring or zone consists of an induction unit placed underneath a vitro-ceramic hob top. The unit is powered by means of a high-frequency AC current.

Energy is transmitted electromagnetically to the cookware on the hob top.

This magnetic field passes through the cooking surface into the bottom of your pans.

The induction hob is used exactly like cast-iron or standard vitro-ceramic hobs. The differences are as follows:

- During cooking heat is generated inside the pans. The ceramic hob gets hot only as heat is reflected by the pans. It is not directly heated by induction.

- The induction unit only operates if there is contact between the induction zone and the pan in the cooking zone

- Reaction to adjustments is immediate, enabling the temperature to be changed quickly and accurately.

The electronic controls mean that the heat can be changed very accurately. The great efficiency of the system means that it is cheap to run and improves comfort for the user as it heats the pan, not the surrounding kitchen.

Cleaning induction hotplates is very easy since when pans boil over, the food they contain does not burn on the cooking surface.

Description :

The induction hob version comprises a 4 mm thick vitroceramic plate equipped, according to the model, with the following :

- one 2400 W zone, Ø 270 mm and a 3300 W booster function (A).
- one 1850 W zone Ø 200 mm and a 2500 W booster function (B).
- one 1400 W zone Ø 145 mm and a 1800W booster function (C).

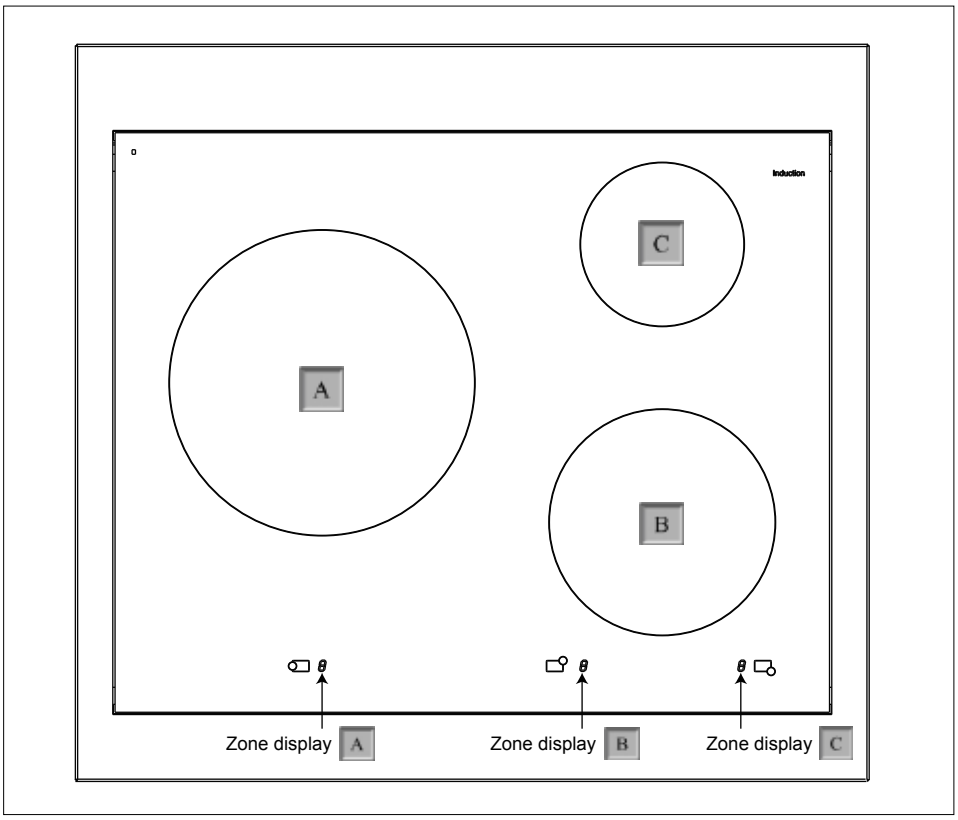

INDUCTION HOB

Induction unit are fitted with :
- a rotating encoder control that gives 9 power selections
- an electronic display of the power being used.
- 2 warming positions (at approximately 42°C and 70°C in the recipient).
- Accelerator to pre-selected heat setting and then automatically switches to the preset power level.
- Booster function.
- Child safety function.
- Overheating cut out.

Note : Each ring is fitted with a waste heat indicator lamp. These lamps light up a short time after the corresponding unit has been switched on and go out when the heat in the zone of the ring has dropped to a value that no longer constitutes a risk to users (approximately 60°C) : Is the Message «**Hot**».
A ventilator is located underneath the table, to refresh air for an optimum power of all units.

Use :

Place food in pan.

Place the pan on the desired cooking zone.

Turn the control knob of the ring required (clockwise).

The power level is set on the display.

To use function accelerator, from position **0**, turn the knob anticlockwise couple second (the letter A is displayed) then turn clockwise to the desired setting. Level **9** will automatically be engaged for as long as it taken to reach the pre-selected setting (This is the accelerator).

Note : One or more zones may be selected.

As heating is very rapid, select the target heat required immediately (i.e. no need to increase heat in stages).

The various positions are best suited to the following examples of cooking operations :

1 & 2 = Keeping food warm or preparing sauces.

3 & 4 = Gentle simmer or maintain cooking.

5 & 6 = Sustained simmer or cooking pasta or rice once water has boiled.

7 = Frying.

8 = Browning or seizing meat.

9 = Bring to or maintain rolling boil.

P = Booster = Brings liquid to boil quickly.

A = Potency level 9 during time to reach the temperature of the level preset then commutes automatically at the level of potency chosen.

u = Assertion in temperature (42°C).

U = Assertion in temperature (70°C).

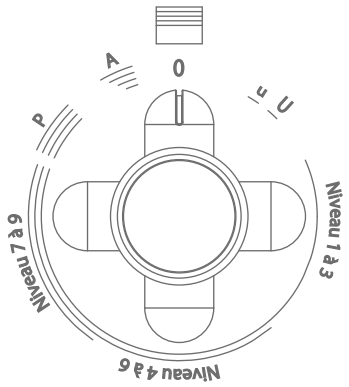

Observation (Note : A, B, C are on figure previous page).

The booster function can be applied to the zone A at the same time as using the booster on B and C, but not all 3 simultanously.

The booster function cannot be applied to both zone B or C irrespective of when then A as in use or not.

When the booster function is used on B, and then C is turned on to boost, the electronic indicator for B will flash a couple of times and automatically revert to power setting **9**. C will remain on boost. The reciprocal applies.

The booster function (lasts 10 minutes), when you use the booster function, you need to check the pan continually.

With all induction, the booster function is very power full. Overuse may damage cookware.

The child safety function blocks the induction unit leaving it off to avoid its being switched on accidentally, for example by a child.

Activating the child safety function :

Ensure the induction zones are in the off / zero position. To engage/ disengage the child security function, the 3 rings have been divides into two sets - the right hand two rings and the left hand one ring.

For the two right hand induction rings

Turn the two right induction control knobs anti-clockwise and hold in this position for a couple of seconds to activate of child security function (signalled by the letter «**L**». The child safety function is now active for the two right induction rings. If the control knobs for the two right zones are now turned, nothing will happen.

For the left hand induction ring

Repeat the process described above with the knob for the left induction zone.

Desactivate Child Safety

Repeating the process described above to a zone wich has been made safe, will re-activate the zone and the letter «**L**» will go out.

CAUTION : You can use the two right induction rings when the child security is activate on the left induction ring. You can use the left induction ring when the child safety is activated on the right rings.

Over heating Cut Out :

In the case of over heating, the induction unit zone will automatically cut out.

Recommendations

Heating is extremely fast.

We advise you to keep a careful eye on your dishes until you are familiar with to induction cooking.

Never leave oil or other greases to heat unattended.

We recommend for maximum efficiency of the induction hob to match the diameter of the cookware to the diameter of the circle printed on the glass-ceramic surface, particularly when using small ring. When using a cookware of larger diameter than the printed zone, offset the cookware towards the rear of the printed circle.

We advise against the use of cookware without a fully flat bottom; some pans have engravings, wich may decrease efficiency.

Disregarding these precautions may decrease the efficiency of your induction hob.

Your food will not cook efficiently unless your pan is ferromagnetic and in direct contact with the selected induction zone Ferromagnetic means iron/ steel cookware check to see if a magnet sticks to it.

Avoid scratching the cooking surface with metallic or abrasive objects.

If you remove a pan from the cooking zone for a moment the display flashes. It is advisable to turn off the power.

If the pan is repositioned on the zone, power restarts automatically at the same level and the flashing ceases.

⊘ Never place or leave enamelled, aluminium or any other type of empty pan on a heating zone. Similarly you should not place aluminium-packed products/ tin fail directly on the surface; this can do irreparable damage to your cooker.

⊘ Do not place unopened tins directly on a hotplate as this could cause them to explode under pressure.

⊘ Never obstruct ventilation zones (front panel, rear ventilation, etc.). The cooker may overheat and become less efficient. Furthermore you shorten the service life of your hob.

⊘ Do not store aerosols or flammable products under the cooking surface.

Use a magnet to check that your pans are ferromagnetic. If they stick to the magnet, you can use them on induction hotplates.

Do not hang heavy items over the cooking surface. They can damage the vitro-ceramic surface if they fall.

Never apply more heat than can be absorbed by the food: too much heat causes loss of water, grease and wastes energy.

Whenever the recipe permits, cover your cookware with a lid in order to save energy.

Safety :

The latest scientific research has found that people fitted with a heart pacemaker are not at risk from using induction cookers. However, if an induction cooker is used improperly a slight risk cannot be ruled out.

It is for this reason that we advise people with pacemakers to consult their physician before using an induction cooker.

Avoid all contact between jewellery (rings, chains, etc.) and the cooking surface while it is switched on; it could cause jewellery to heat.

CAUTION :

If a visible crack appears in the vitro-ceramic surface of your hob, immediately disconnect the power supply and contact your installer.

Display :

F	The sensor for a particular hotplate is not working	The rest of the surface can nevertheless continue functioning correctly – Contact your retailer
H	Residual temperature	Indicates that the zone is hot – The display goes out when the temp has dropped below 60°C
⊔	Pan undetected	No pan or pans unsuitable for induction cooking
U	Temperature hold : 70 °C	-
u	Temperature hold : 42 °C	-
L	Child safety function	This function is activated and deactivated by holding the knob in position “A”
P	Booster function	This function is only available on hotplates A and B. .
⌐	Fault detected in the induction system	This function is activated and deactivated by holding the knob in position «A». Check the control encoder connectors. Check the connection to the encoders and inductors and for any damaged or cut wires

If the induction cooker does not work

- Check your pans
- First switch off the cooker. Then check ventilation of the generator
- First switch off the cooker. Then check the power supply and electrical connectors.

RECOMMENDATIONS BEFORE USING OVENS

Designed to help you enjoy the best performance from your ovens.

To ensure you use the oven under optimal conditions and to its best advantage please read the following recommendations which will undoubtedly improve your understanding of the principles of oven cooking.

An oven cooks and heats by using a heat source which is generally located inside the oven. This heat source heats the air and then the entire oven. The food therefore cooks thanks to the heat given off by the heating elements but also thanks to heat radiated from the oven walls.

A few preliminary recommendations :

Before using the oven for the first time, heat it while empty to the 220°C position on the thermostat for approximately 2 hours to heat the rockwool oven insulation and burn off the grease used in the manufacturing process. All odours and smoke will disappear when the oven has been used a few times.

Oven dishes :

The material of which cookware is made influences cooking due to its thickness, ability to transmit heat and its colour.

¤ Aluminium, earthenware and aluminium with a non-stick coating reduce cooking and underside browning. These materials are recommended for cooking cakes and roasts.

¤ Enamelled cast iron, anodised aluminium, tin-plated iron, ovenproof glass, heat-resistant porcelain and aluminium with a non-stick coating and coloured exterior increase underside browning. These materials are recommended in particular for open tarts, quiches and all crispy preparations that must be browned on the underside as well as on the top.

Cooking recommendations :

We advise you **:**

→ Pre-heat the oven for 10 to 12 minutes depending on the setting selected before placing your dish in the oven.

→ When placing the dish in the oven, make sure that it is not too close to the oven walls in order to prevent the edges of dishes being exposed to excessive radiated heat.

→ Not to place dishes directly on the floor of the oven or to cook meat directly in the dripping pan.

→ To use dishes that retain considerable heat (earthenware or enamelled cast iron) with high sides, whose measurements are in proportion to the piece of meat to be roasted and to turn red meat over half way through cooking to prevent smoke from the grease that is given off when meat is cooked

→ Place the drip tray at the bottom of the oven in order to collect any spillages when cooking fruit tarts.

Using the grill on electric ovens :

CAUTION : the grill cooks very quickly, always keep an eye on the food you are cooking.

→ Lightly oil the surface of meat and fish before placing them on the sliding grid.

→ Only place and use the drip tray under the oven rack in order to collect cooking juices and prevent spillages in the case of cheese dish.

→ The grill is either on or off. You do not change its temperature. To adjust the speed of cooking or grilling, change the level of the food in the oven raising it closer to or futher from the grill as required.

→ **Keep oven door closed** when using in grill mode, except to chek food cooking.

Using there tips, we recommend that you try cooking some simple & different dishes to help you get the feel of your oven.

CONVECTION ELECTRIC OVEN
(VERTICAL SIDE OVEN)

The convection electric oven is a real oven whose special shape means that it can be used to cook several foods at the same time «higher» than in a conventional oven, such as 2 chickens.

Description :

Made of sheet steel with an acid-resistant enamel coating applied at 850 °C.

The oven have 4 shelf positions allowing shelves and flatware to slide in easily.

The dimensions of oven are 305 x 405 x 400 mm, 49 litre.

The convection electric oven is supplied with two oven racks, a roasting tray and a roating tray insert.

The oven is heated by a circular 2650 W surrounding a fan motor in the back wall of the oven.

There is also an electric grill with a power of 2400 W in the roof.

The heating element is controlled by a thermostat switch.

There are 2 indicator lamps on the control panel of the electric-oven version :

- Signal lamp A lights when the oven/ grill on.
- Signal lamp B shows status of the oven/ grill in use (see below).

Use :

The oven must be pre-heated at the thermostat setting chosen for cooking.
Turn the thermostat switch clockwise to the required mark.

The indicator lamps (A and B) are lit. When indicator lamp B is no longer lit, the selected temperature has been reached and you can then place your dish in the oven.

To turn off, turn the control knob anti-clockwise to the O position.

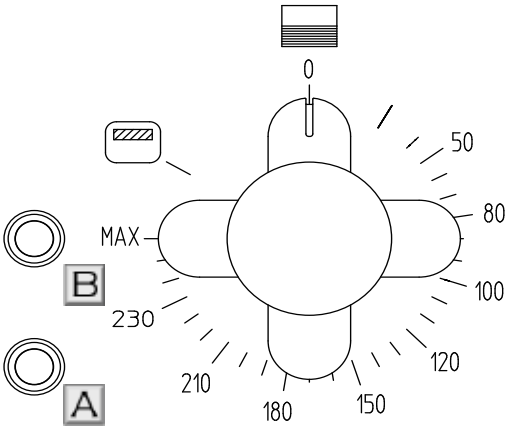

Electric grill

The electric oven is equipped with a grill that can be used to grill meat and fish cook all types of dishes au gratin. The grill is ideal for finishing off crèmes brûlées or to obtain perfect cooking of a rib of beef.

Use

Turn the thermostat control knob one click further to the symbol. To turn off, turn the control knob anti-clockwise to the **O** position.

Useful hint : Prior to use, we advise you to read the «Use of the grill on electric ovens" paragraph in the "Preliminary recommendations for the use of the ovens" chapter of this manual.

REMEMBER : - GRILL FOOD WITH THE OVEN DOOR CLOSED

- CHECK THE FOOD every minute or so Lacanche grills are extremely powerful.

STATIC ELECTRIC OVEN

Static Electric Ovens are simple to use and are ideal general purpose ovens.

The static electric oven has three heating elements and can be used as both an oven and a grill.

The static electric oven is specially recommended for dry pastries such as almond biscuits, Genoese sponges, etc.

Description :

Made of sheet steel with an acid-resistant enamel coating applied at 850 °C. The oven have 3 shelf positions (70 mm spacing) allowing shelves and flatware to slide in easily.

The dimensions of the oven are 530 mm x 305 mm x 455 mm, 74 litre.

The electric oven is supplied equipped with one roasting tray, one grill insert with fits into the roasting tray and one oven rack insert as standard.

The heating elements consist of one 1700 W element at the base and a peripheral 1200 W element in the roof which operate simultaneously.

In the grill position, only the central element of the 2850 W element in the roof operates.

The heating elements are controlled by a thermostatic switch.

There are 2 indicator lamps on the control panel of the electric-oven version :

- Signal lamp A lights when the oven/ grill on.
- Signal lamp B shows status of the oven/ grill in use (see below).

Use :

The oven must be pre-heated at the thermostat setting chosen for cooking.
Turn the thermostat switch clockwise to the required mark.

The indicator lamps (A and B) are lit. When indicator lamp B is no longer lit, the selected temperature has been reached and you can then place your dish in the oven.

To turn off, turn the control knob anti-clockwise to the O position.

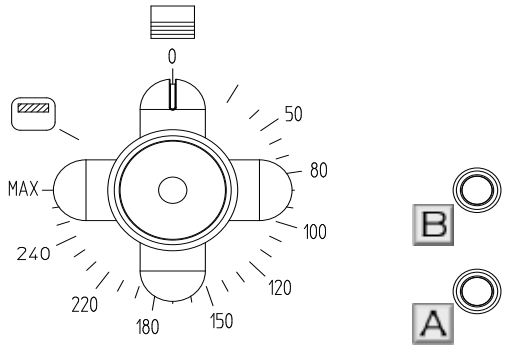

Electric grill

The electric oven is equipped with a grill that can be used to grill meat and fish cook all types of dishes au gratin. The grill is ideal for finishing off crèmes brûlées or to obtain perfect cooking of a rib of beef.

Use

Turn the thermostat control knob one click further to the symbol. To turn off, turn the control knob anti-clockwise to the **O** position.

Useful hint : Prior to use, we advise you to read the «Use of the grill on electric ovens" paragraph in the "Preliminary recommendations for the use of the ovens" chapter of this manual.

REMEMBER : - GRILL FOOD WITH THE OVEN DOOR CLOSED

- CHECK THE FOOD every minute or so Lacanche grills are extremely powerful.

DUAL FUNCTION ELECTRIC OVEN

This oven has two functions: one to set the “Static Electric Oven” mode, and one to set the “Electric Convection Oven” mode.

The dual function electric ovens are simple to use.

Description :

Made of sheet with an acid-resistant enamel coating applied at 850°C. The dual function electric ovens have 3 shelf positions (70 mm spacing) allowing shelves and flatware to slide easily.
The dimensions of the oven are 530 mm x 305 mm x 455 mm, 65 litre.

The dual function electric oven is supplied equipped with one roasting tray, one grill insert with fits into the roasting tray and one oven rack insert as standard.

To choose the mode of operation by flipping the switch I is in position

for operation in static mode or for operation in convection mode.

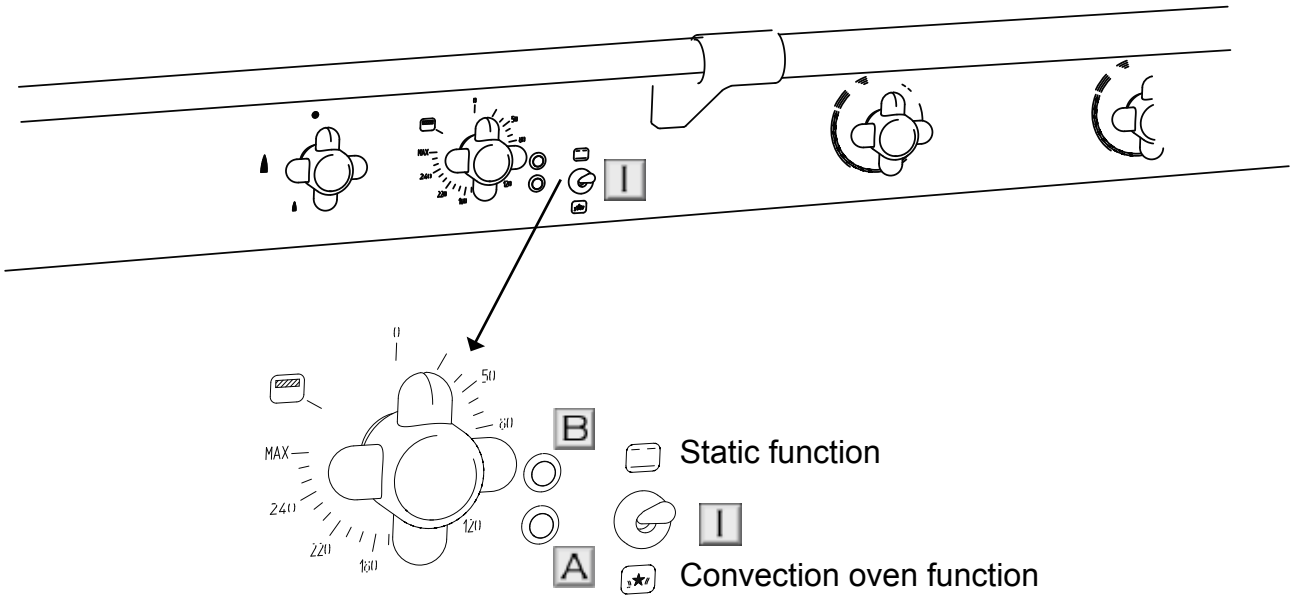

The heating elements are controlled by a thermostatic switch.

There are 2 indicator lamps on the control panel of the electric-oven version :

- Signal lamp A lights when the oven/ grill on.
- Signal lamp B shows status of the oven/ grill in use (see below).

Use :

Select the static mode by turning the switch to position or select the convection mode by turning the switch to position . .
The oven must be pre-heated at the thermostat setting chosen for cooking.
Turn the thermostat switch clockwise to the required mark.
The indicator lamps (A and B) are lit. When indicator lamp B is no longer lit, the selected temperature has been reached and you can then place your dish in the oven.
To turn off, turn the control knob anti-clockwise to the **O** position.

DUAL FUNCTION ELECTRIC OVEN - STATIC MODE

Static Electric Ovens are simple to use and are ideal general purpose ovens.

The static electric oven has three heating elements and can be used as both an oven and a grill.

The static electric oven is specially recommended for dry pastries such as almond biscuits, Genoese sponges, etc.

The heating elements consist of one 1700 W element at the base and a peripheral 1200 W element in the roof which operate simultaneously.

DUAL FUNCTION ELECTRIC OVEN - CONVECTION MODE

Convection ovens have many advantages, the main benefit being that identical or different dishes can be cooked evenly at several levels. It is therefore particularly suitable for cooking cakes, pastries, Viennese bread or flaky pastry.

Air circulation is achieved by using one or two turbines inside the oven which draw in air and expel it onto one or two heating elements, thus producing movement of warm air referred to as “convection”.

It heats quickly and defrosts frozen food evenly.

Different dishes can be cooked simultaneously without taste transference because odours are destroyed as the air passes over the heating element.

Note : In a forced convection oven cooking can take place at temperatures lower than in a conventional oven consider reducing the heating temperatures Most recipes suggest decreasing the suggested temperature by between 10 x 15 °C when using a convection oven. Also it may be helpful to rotate food (particularly larger dishes) during the cooking process.

The oven is heated by a circular 2950 W element.

Electric grill

The electric oven is equipped with a grill that can be used to grill meat and fish cook all types of dishes au gratin. The grill is ideal for finishing off crèmes brûlées or to obtain perfect cooking of a rib of beef.

Use

Turn the thermostat control knob one click further to the symbol. To turn off, turn the control knob clockwise to the O position.

Useful hint : Prior to use, we advise you to read the «Use of the grill on electric ovens” paragraph in the “Preliminary recommendations for the use of the ovens” chapter of this manual.

REMEMBER : - GRILL FOOD WITH THE OVEN DOOR CLOSED

- CHECK THE FOOD every minute or so Lacanche grills are extremely powerful.

SIMMER OVEN (OPTION)

The simmer oven has many uses such as plate warming, holding food, slow cooking, drying food etc. It offers great flexibility when organising your meals and cooking for large numbers. Its principle is straightforward and involves using a heating element to keep your simmer oven heated at the desired temperature.
Heating is obtained by means of a heating element located underneath the base plate.

Description :

Made of sheet steel with an acid-resistant enamel coating, the simmer oven have 4 shelf levels positions (125 mm spacing) allowing shelves and flarware to slide in easily, that can accommodate catering sized shelves GN1/1.

The simmer oven is supplied equipped with two oven racks. Others available separately.

The simmr oven is heated by a 950 W element

The heating element is controlled by a thermostatic switch on the control panel.

An indicator lamp next to the control knob indicates thermostat control of the heating element. It is lit or no longer lit depending on the programme temperature (see below).

Use :

The simmer oven should be pre-heated roughly one hour before plates or dishes are placed inside it.

Turn the thermostat switch clockwise to the selected mark. Indicator lamp (A) is lit and goes out when the desired temperature has been reached, at wich point the simmer oven as ready to use.

In order to switch off, turn the thermostat control knob anticlockwise to the 0 position.

Although you can select any position for the simmer oven control knob, four positions are indicated on the control panel of the cooker. These represent approximately as follows :

Position	Temperature °C / Gas oven
1	35 °C
2	65 °C
3	90 °C
4	110 °C

Useful hint :

Before using the simmer oven for the first time, it is advisable to switch it on without anything in it at the maximum thermostat position for 1/2 hour in order to eliminate the smell of fumes due to the composition of the mineral wool used to insulate the oven and residues from greases applied during manufacture. These odours will disappear after the oven has been used a few times.

- Never place plates directly on the base, crockery may break due to the rapid increase in temperature.
- Your dishes or plates may be extremely hot depending on the temperature selected.

Take the necessary precautions before handling them.

Caution : Always ensure that food is correctly cooked, especially when the slow cooking using lower temperatures. Ensure that any food has reached its regulatory or advisable temperature during cooking to make it safe and suitable for consumption. Always be carefu when re-heating food and consult advice as required.

Before any cleaning work, close the gas supply and/or isolate from the mains supply

Do not use a steam cleaner to clean the appliance.

Ceramic cooktop :

Hotplates must ALWAYS be kept dry. Wipe your utensils before placing them on the hotplates.

Limescale can be removed by using white wine vinegar. Cover the marks with a cloth soaked in wine vinegar and leave for 1/2 h before carefully rinsing and drying.

Marks made by metal or superficial deposits which remain after the standard cleaning described above can be removed by using a liquid product for cleaning stainless steel utensils (e.g. cream stainless steel ZIP ®, stainless steel PPZ ®, etc.).

The stainless steel part can be cleaned by using a damp sponge with a mild detergent for stubborn marks (e.g. CIF Ammoniacal ®, etc.).

If any sugar-based syrup falls on the glass ceramic hob during use, leave the element switched to position 1, and, using a razor blade scraper (such as CERA Quick) IMMEDIATELY remove the remaining burnt-on layer.

CAUTION

If there is any visible sign of a surface crack, immediately isolate appliance from the supply to prevent risk of electric shock. Contact your installer.

Brass trim :

Use a special brass-cleaning product (e.g. MIROR®) and a soft cloth. If the product runs onto the enamel do not rub (these products generally contain abrasives). Rinse immediately with clean water without rubbing.

Another solution is to use solid soap (Pierre d'argent, Pierre d'argile) applied with a damp sponge to the zones to be cleaned.

This solution is also very effective for cleaning and bringing a shine back to brass or chrome surfaces.

Enamelled surfaces :

Use a sponge soaked in soapy water or a window-cleaning product but never scouring powder.

You can also use methylated spirit but only when the range is cold.

Ovens :

Clean the walls with a non-abrasive cleaning agent. Harsh cleaning agents should not be used. **W**here the use of such products cannot be avoided, first remove the oven door gasket and reinstall after cleaning.

Rinse and dry.

Clean the area behind the sheet protecting the turbine(s) at least once a year. The grease carried by the airflow and when the range is used at lower temperatures can create smoke.

Do not spray strong cleaning products directly onto the elements in electric ovens.

After cleaning, before use make sure that the base is properly fitted under the groove in the fascia in order to avoid deformation of the base due to heat.

Body :

Use special stainless steel cleaners (ZIP INOX®, JOHNSON INOX®, PPZ INOX®, for instance). Do not use abrasive cleaners.

Stainless-steel top :

The entire hob is dished or comprises dished recesses for easy cleaning and improved hygiene (no water trap). The hob should be cleaned with liquid, non-chlorinated products to avoid scratching the steel.

If the hob is stained use a clay stone- and soap-based paste available from department stores.

Stainless-steel trim :

The stainless-steel trim should be cleaned with aerosol products available from department stores. **Y**ou should nevertheless choose a cleaner that contains only a small quantity of silicone to avoid leaving white streaks after the product dries.

CAUTION

Use NO chlorinated cleasers to clean this unit.

Carefully read the precautions and recommendations for applying the products you use to clean and maintain the range. Follow the instructions for use.

Information regarding the elimination of electric and electronic waste

Government Order No. 2005-829 dated 20 July 2005 relative to the composition of electrical and electronic equipment and the elimination of waste resulting from such equipment implementing European Directives 2002/95/EC and 2002/96/EC.

- Electrical and electronic equipment (EEE) and Waste from Electric and Electronic Equipment (WEEE) are regulated in Europe by two directives whose aim is to limit the use of hazardous substances in EEEs and to encourage the re-use, recycling and other forms of recovery of WEEEs in order to reduce the quantity of waste to be eliminated.

Each item of electrical and electronic equipment marketed after 13 August 2005 must display this sign.

The sign means that the equipment should not be thrown away with other waste, that it is collected separately in order to be recovered, reused or recycled.

- Users of electrical and electronic equipment must not throw WEEEs away along with unsorted municipal waste**.**

- Users are provided with suitable waste collection systems.

By complying with these Orders users of electrical and electronic equipment avoid effects that are potentially harmful to the environment and public health. They also help preserve natural resources.